IM-200BAA

SELF-CONTAINED SQUARE CUBER WITH BUILT-IN STORAGE BIN

IM-200BAA
04/18/16
Item # 13376

Item #: _____

Project: _____

Qty: _____

AIA#: _____

W x D x H
39 1/2" x 23 5/8" x 33 1/2"*
*including 6" legs

IM-200BAA ★
Air-Cooled

★ ENERGY STAR

NSF · AHRI CERTIFIED · ETL Intertek · UL CERTIFIED MH48989 · ISO9001 · ISO14001 · The KCL CADalog

FACTORY WARRANTY
Parts & Labor 3 YR Entire Machine
Parts 5 YR Compressor

Features

- ► **Individual square cube**
- ► **Self-Contained with built-in storage bin**
- ★ **ENERGY STAR® Qualified**

- Up to 200 lbs. of ice production per 24 hours
- Up to 50 lbs. of built-in storage capacity*
- Durable stainless steel exterior
- EverCheck™ alert system
- Removable air filter
- R-134a Refrigerant
- 5' 7/8" (1.8 m) power cord with NEMA 5-15P plug

Warranty

- 3 year Parts & Labor on entire machine.
- 5 year Parts on Compressor; air-cooled condenser coil.

Valid in United States, Canada, Puerto Rico & U.S. Territories. Contact factory for warranty in other countries.

*Rated in accordance with AHRI Standard 820 (I-P)

		ICE PRODUCTION				WATER USAGE		ELECTRICAL						
Condenser	**Model**	**Air / Water Temp Lbs. per 24 hours**		**Per Cycle**		**Potable** Gal. per 100 lbs.	**Condenser** Gal. per 100 lbs.	**kWh Used** per 100 lbs.	**Max. Fuse Size** or HACR Circuit Breaker	**Amperage**	**Voltage**	**Heat Rejection BTU/hr.**	**Shipping Weight**	**ENERGY STAR®**
		70°/ 50°F	**90°/ 70°F**	**Lbs.**	**Cubes**	**90°/ 70°F**	**90°/ 70°F**	**90°/ 70°F**						
Air-Cooled	IM-200BAA	200	160	3.9	80	23.0	N/A	8.3	15A	7.6A	115V/60/1	3,500	203 lbs.	★

IM Cube Dimensions*

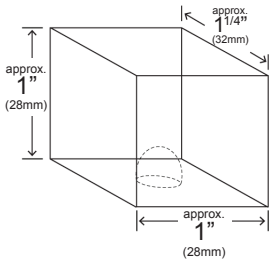

* approximate size; image not to scale

Operating Limits

- Ambient Temp Range 45 - 100°F
- Water Temp Range 45 - 90°F
- Water Pressure 10 - 113 PSIG
- Voltage Range 104 - 127V

Service

- Panels easily removed and all components accessible for service.
- Removable/cleanable air filter.

Plumbing

- Icemaker Water Supply Line: Minimum 1/4" Nominal ID Copper Water Tubing or Equivalent
- Icemaker Drain Line: Minimum 3/4" Nominal ID Hard Pipe or Equivalent

Clearance

- Allow 6" (15 cm) clearance on right side and 2" (5 cm) on rear. Allow 2" (5 cm) on left side and 0" on top or 5/8" (15 mm) on left side and 2" (5 cm) on top for proper air circulation and ease of maintenance/service.

© HOSHIZAKI AMERICA, INC. 618 Hwy, 74 S., Peachtree City, GA 30269 | TEL 800-438-6087 | FAX 800-345-1325 | www.hoshizakiamerica.com

IM-200BAA

SELF-CONTAINED SQUARE CUBER WITH BUILT-IN STORAGE BIN

IM-200BAA
04/18/16
Item # 13376

FRONT VIEW

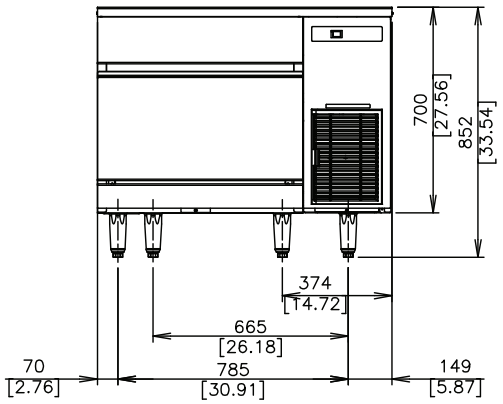

SIDE VIEW

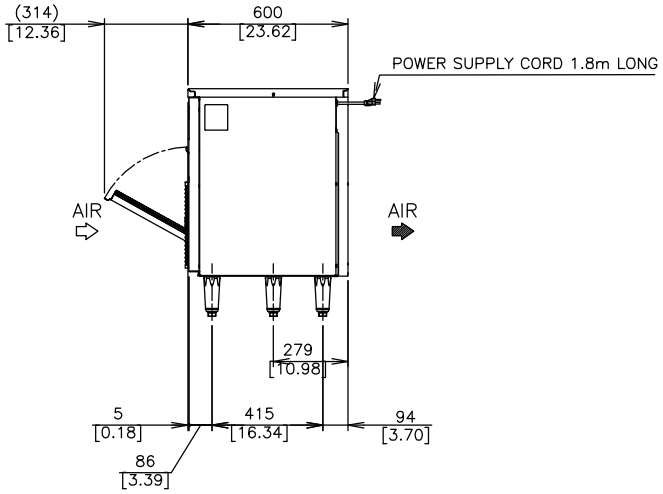

BOTTOM VIEW

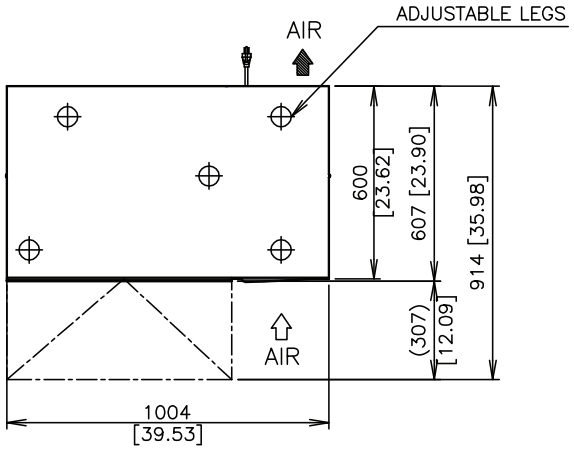
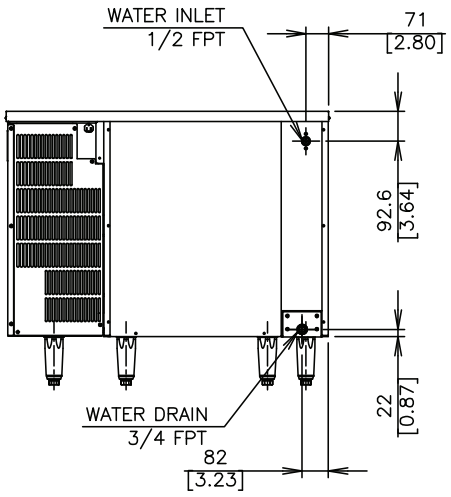
REAR VIEW